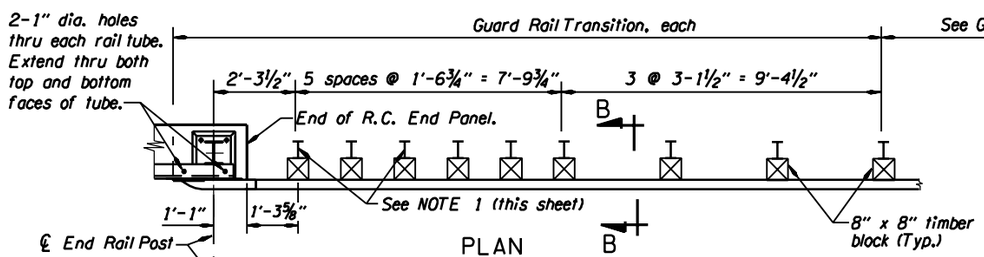

PLAN

No Scale

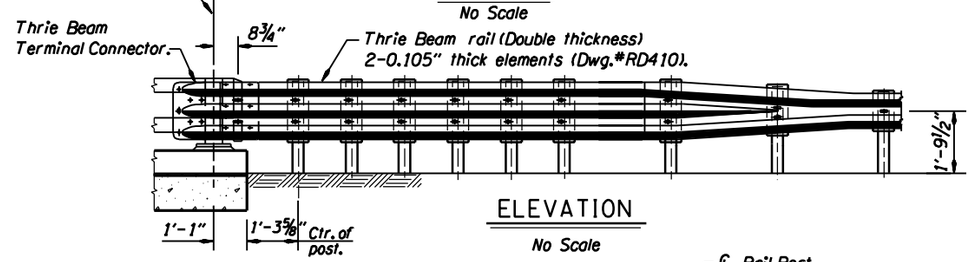

ELEVATION

No Scale

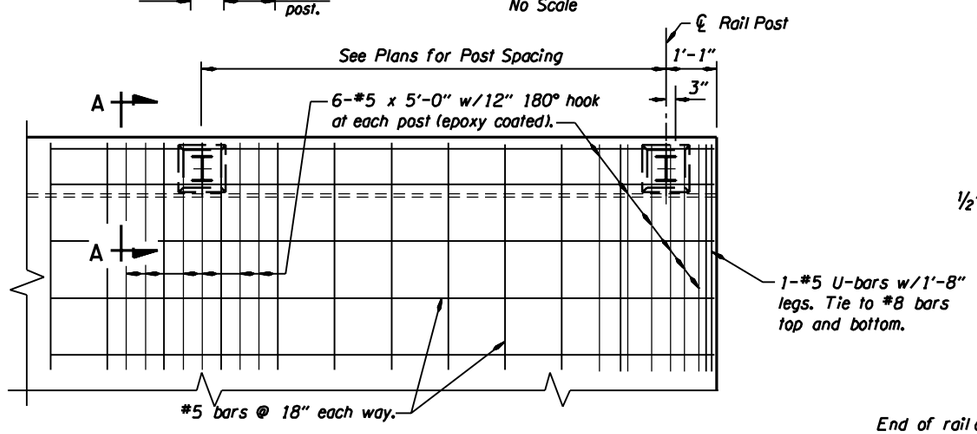

END PANEL TOP REBAR AT RAIL POSTS

No Scale

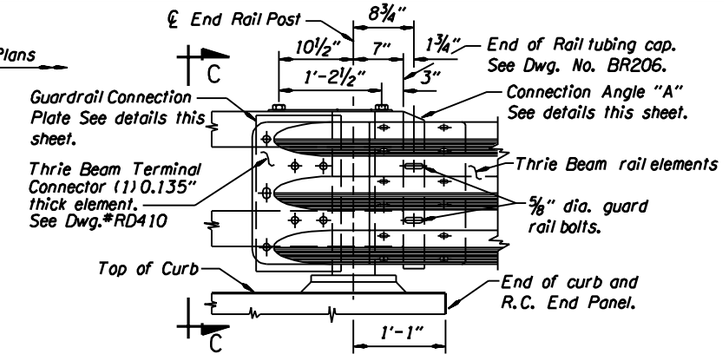

ELEVATION - TRANSITION CONNECTION

No Scale

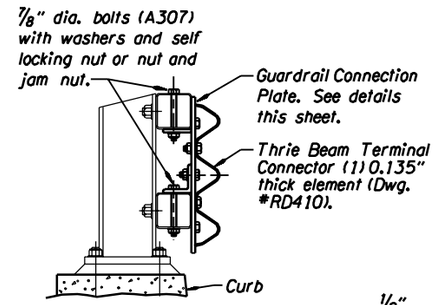

SECTION C-C

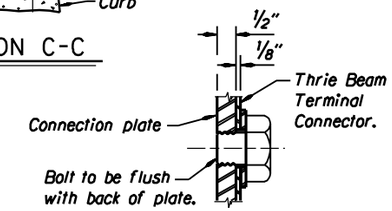

DETAIL "A"

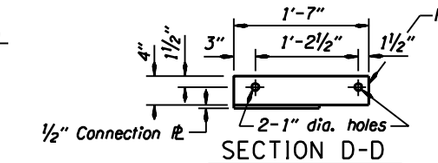

SECTION D-D

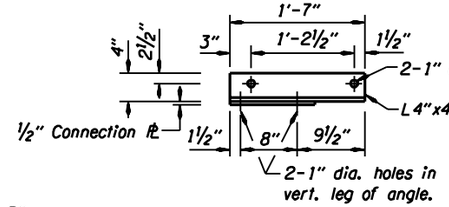

SECTION E-E

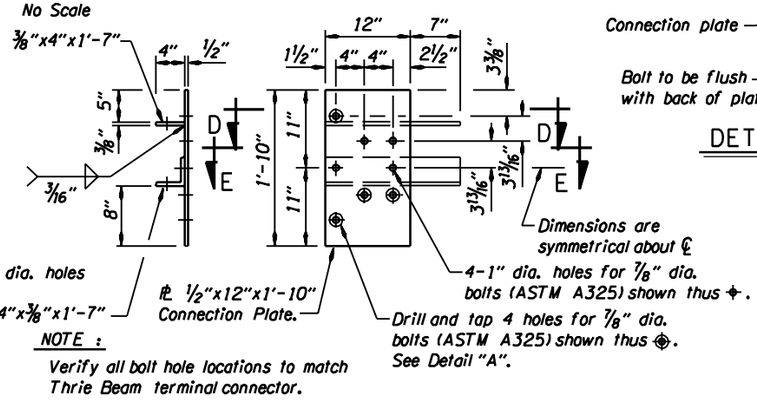

NOTE :

Verify all bolt hole locations to match Thrie Beam terminal connector.

GUARDRAIL CONNECTION PLATE DETAILS

No Scale

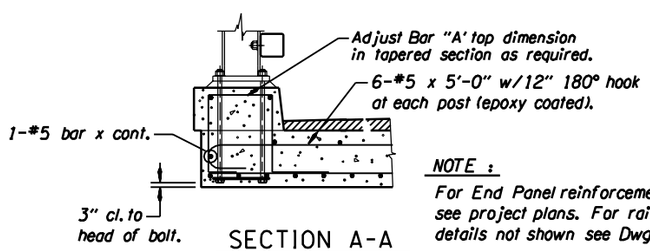

SECTION A-A

No Scale

NOTE :

For End Panel reinforcement not shown see project plans. For rail and curb details not shown see Dwg. No. BR206.

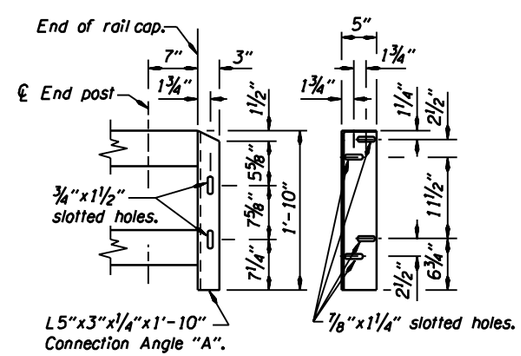

CONNECTION ANGLE "A"

No Scale

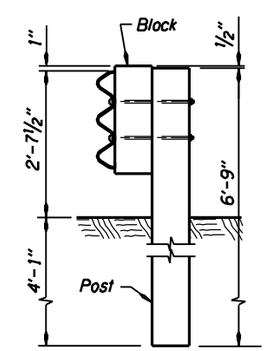

SECTION B-B

No Scale

NOTE 1:

Transition posts may be steel W6x9 or timber 10"x10". All posts to be of same material.

BR207

△	DATE	REVISION	BY
1	10-02	Revise Thrie-Beam Transition	APS
2	01-04	General Revision	APS
3	01-05	Transition Posts and Blocks	KFD

The selection and use of this Standard Drawing, while designed in accordance with generally accepted engineering principles and practices, is the sole responsibility of the user and should not be used without consulting a Registered Professional Engineer.

NOTE: All material and workmanship shall be in accordance with the current Oregon Standard Specifications.

OREGON STANDARD DRAWINGS

ACCOMPANIED BY DWGS. BR206, RD400, RD405 and RD410

BRIDGE NO. STANDARD

DATE 2002

CALC. BOOK ~

2-TUBE STANDARD CURB MOUNT RAIL

RAIL TRANSITION DETAILS

SHEET 2 OF 2

DRAWING NO. BR207